Protective and switching devices of photovoltaic sources

OEZ®

WWW.OEZ.COM

CONTENTS

INTRODUCTORY INFORMATION

OEZ DEVICES SUITABLE FOR PHOTOVOLTAIC APPLICATIONS

FREQUENTLY ASKED QUESTIONS IN THE PHOTOVOLTAIC FIELD

NOTES

SPECIFICS OF PHOTOVOLTAIC SOURCES

Globally growing demand for environmentally friendly use of energy brings about boom of alternative power sources. In September 2001 the European Parliament and Council adopted Directive 2001/77/EC *„Promotion of electricity from renewable sources"*. The goal of this directive is to promote renewable sources of electrical energy as a priority measure, because their use contributes to environment protection and sustainable development, and among other things, facilitates the fulfilment objectives of the Kyoto protocol regarding world-wide reduction of greenhouse gas emissions.
It follows from the Directive 2001/77/EC that the EU shall increase the generation of electrical energy from renewable sources to 20% of total power consumption by 2020.

For this reason the generation of electrical energy from renewable sources and especially photovoltaic sources is coming to the front.

In practice a single photovoltaic (PV) cell has only a small use. That is why individual cells are connected into bigger units, so called PV panels modules). A group of PV panels connected in series is called a string. Powerful photovoltaic sources are formed by big number of series-parallel connected panels, which form so called PV array. PV cells generate DC electrical energy, which is then transformed by an inverter to AC electrical energy of required parameters.

Specific characteristics of PV sources and design requirements arising from them:

a) High investment costs
The focus is on the return on investment. This of course depends on the design and efficiency as well as on service life of installations. That is why special attention is paid to reduction of risks and minimization of failures.
Photovoltaic panels, inverters and cables represent the most expensive part of the whole PV application, and thus protection is focused above all on these components.
Failure or, in extreme case, destruction can be caused by atmospheric or switching overvoltages.
Another potential source of failure is short-circuit of part of the electrical circuit, which can result in overload of certain parts up to their eventual destruction or possibly even in fire.
For this reason special attention is paid to the use of devices from a proven manufacturer.

b) DC voltage of relatively high values
As it has already been mentioned, PV cells are source of direct current electrical energy. In practical applications direct current voltages are mostly up to 1000 V d.c.
The values of voltage are given by the number of panels connected in series of individual PV arrays.
In ideal case the direct current is of a constant value, and does not come through zero as opposed to alternating current.
For this reason it is evident that switching off the direct current, especially that of a higher voltage, is more difficult compared to alternating current, and therefore in DC applications it is necessary to use special protective and switching devices, which are designed for this purpose.
At the inverter's outlet there are alternating electrical quantities, for which it is possible to use appropriate elements for protection and switching of standard AC circuits.

c) High purchase price of electricity (high cost of power losses)
Thanks to generous state support PV applications are often considered above all from the financial point of view, with focus on return on investment. Project optimization can bring interesting savings already in the design stage, typically, for example in the design of a cable line. Total cost of the line can be minimized with use of an optimal ratio of cable purchase price and losses in the line, which will favourably show itself in the return on investment. For optimization of AC side of the cable line it is possible to use program Sichr version 10 advantageously.

All these specifics shall be considered in designing protective and switching elements of electrical installations.

GENERAL CONNECTION DIAGRAM OF PHOTOVOLTAIC SOURCE

The general connection diagram (Fig. 1) shows an example of PV source working in parallel with the distribution network. The source of electrical energy is a photovoltaic array, which is connected by a line with the inverter.
In case of a higher number of strings connected in parallel it is necessary to ensure protection of PV panels against reverse currents, and overcurrent protection of cables of PV array. At the same time overvoltage protection is provided there (1). In case of a longer line between the PV array and the inverter it is appropriate to use surge voltage arresters both at the inverter and close to PV arrays. To ensure maintenance of the inverter, it is necessary to meet the requirement for its possible disconnection from both AC and DC side; therefore DC disconnector (2) and AC disconnector (3) are installed at the inverter. In case that it is functionally ensured that switching the DC side off/on always takes place without load, i.e. the AC side will be switched off sooner and switched on later, it is possible to use also a disconnector on the DC side.
Downstream of the a.c. disconnector there is a surge voltage arrester (4) installed; it is above all recommended if a long line is after it. Furthermore, it is possible to connect local meter of electrical energy generated by PV source, which is connected via a protective device to the switchboard (5).
In case of high-capacity PV source individual parallel line of the PV source is connected via protective devices to the switchboard. The switchboard and downstream wiring is protected by a surge voltage arrester (6) on the side of connection to the distribution network.
The meter of the supplied and consumed energy (generation and consumption on site – green bonus) or only of supplied energy (only generation without consumption) is preceded by the main disconnector (7) of the switchboard. The switchboard, disconnector and the line to the distribution system are protected against overload and short-circuit by the main protective device (8).

Fig. 1 – General diagram of PV source working in parallel with the distribution network

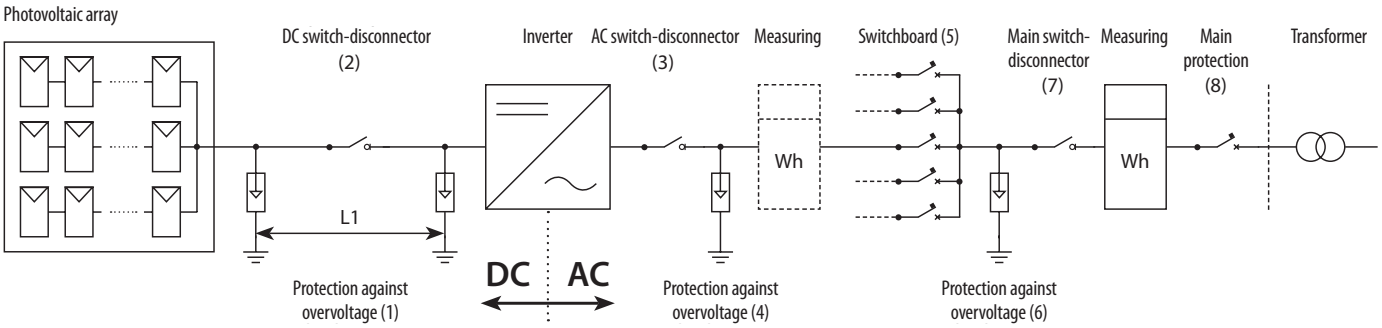

In case of a higher number of strings connected in parallel in the photovoltaic array (Fig. 2) it is necessary to ensure protection of PV panels against reverse currents and overcurrent protection of cables.
Protection of strings (9) is sometimes omitted, because short-circuit current Isc of the PV panel is only by 10 to 20% higher than its rated operating current.
In case of application with maximum 3 strings there is no risk of panel damage by reverse current induced by short circuit.
The risk of thermal overload of cables due to the short-circuit can be dealt with by their appropriate overrating. In a higher number of parallel strings it is necessary to take into account the value of possible reverse current with regard to maximum allowable reverse current of the PV panel.

Fig. 2 - Detail of photovoltaic array

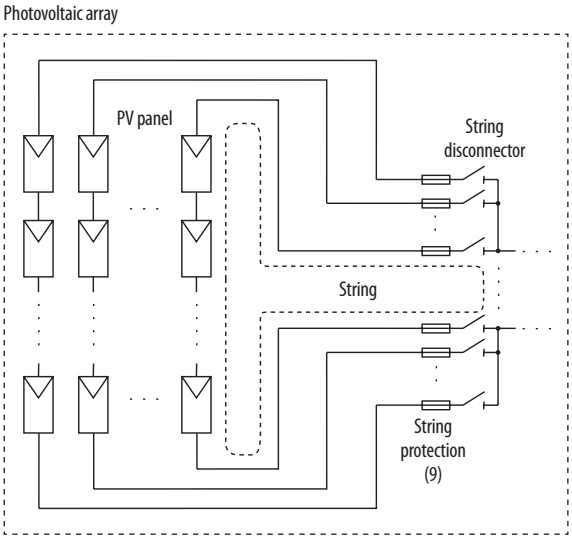

RANGE OF OEZ DEVICES FOR PHOTOVOLTAIC APPLICATIONS

OEZ s.r.o., a traditional manufacturer of low-voltage protection and switching devices is able to offer a range of products suitable also for PV applications

	Use	Product range OEZ	Types
(9)	Protection of strings and parts of PV arrays	Fuse systems Varius	e.g. Fuses PF10 + Disconnector OPF10 Fuses PT22 + Disconnector OPT22 Fuses for semiconductor protection PV514, P51R06, P51U06
(1) (4)	Protection against overvoltage	Modular devices Minia AC side DC side	SVC-350 SVBC SVF-1000, SVF-600
(2)	DC switch-disconnector	Modular devices Minia	5TE2-515, LPN-DC, LST-DC
(3)	AC switch-disconnector	Fuse devices Varius Modular devices Minia Moulded case circuit breakers Modeion	Fuse switch-disconnectors OPV, FH, FD Circuit breakers LPE, LPN, LST Switch-disconnectors APN, AST Circuit breakers BC, BD, BH, BL
(7)	Main protection	Modular devices Minia Moulded case circuit breakers Modeion	Circuit breakers LPE, LPN, LST Circuit breakers BC, BD, BH, BL
(5) (8)	Distribution boards and switchboards	Switchboard cabinets Distri	QA 55 NP 65

For detailed information about all OEZ products suitable for photovoltaic applications see www.oez.com or standard catalogues.

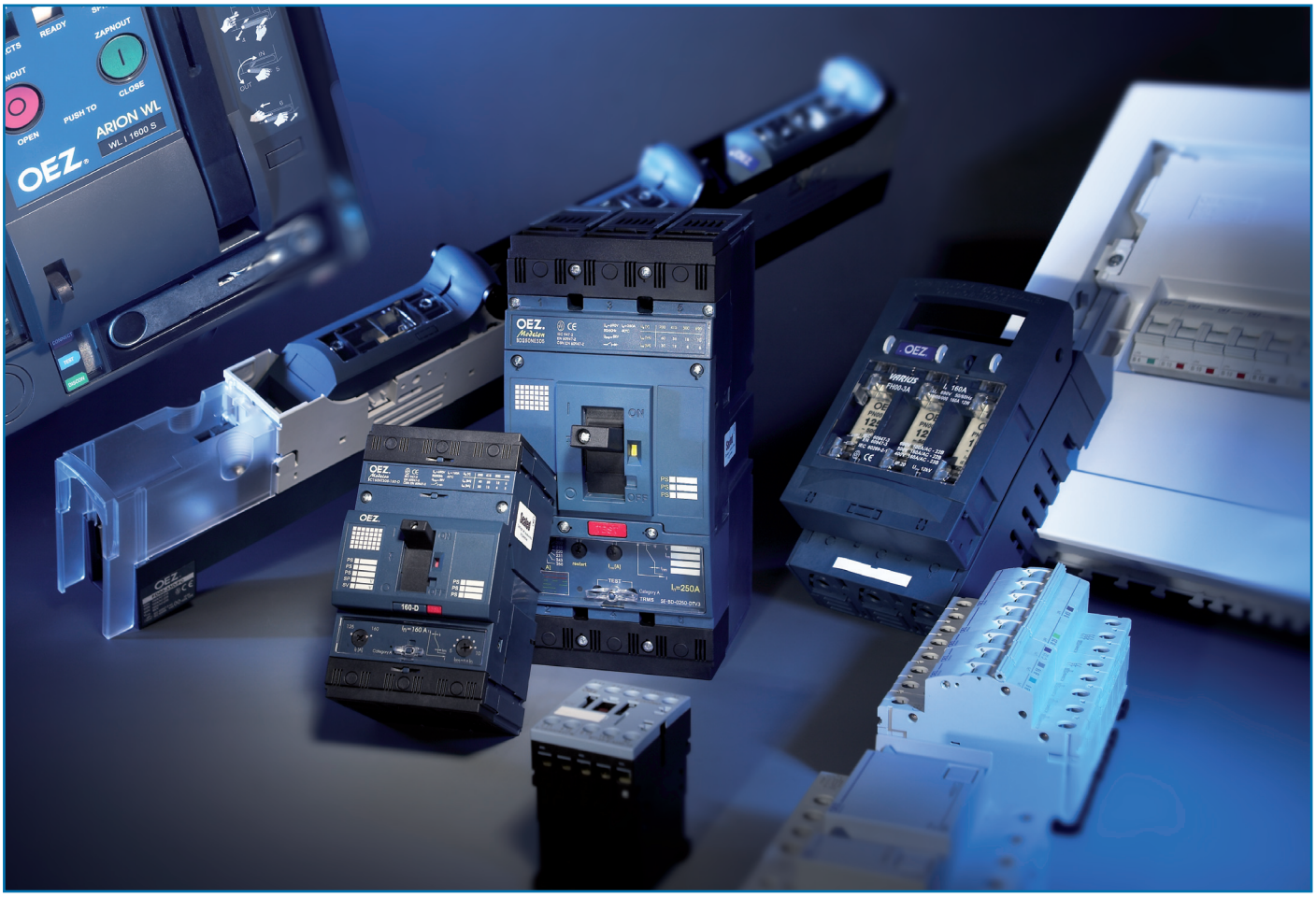

MINIA Modeion ARION VARIUS Conteo DISTRI

FUSE-LINKS UP TO 900 V d.c. (CYLINDRICAL)

Fuse-links PF10 are intended for semiconductors protection and they are suitable for protection of photovoltaic systems.

- Extremely low values of I^2t and cut-off current.
- Small dimensions and low power losses.
- Possibility of use in fuse disconnector OPF10.
- The fuse-links do not contain harmful substances according to the RoHS Regulation (cadmium, lead and other).
- Utilization category gR for protection of semiconductor devices against overload and short-circuit.

Fuse-links for semiconductor protection

I_n [A]	Type	Product code	Power losses of the fuse-link [W]	I^2t total [A^2s]	Weight [kg]	Package [pcs]
4	**PF10 4A gR**	38696	0.69	45	0.01	20
6	**PF10 6A gR**	38697	0.95	48	0.01	20
8	**PF10 8A gR**	38698	1.43	129	0.01	20
10	**PF10 10A gR**	38699	1.62	271	0.01	20
12	**PF10 12A gR**	38700	2.16	371	0.01	20
16	**PF10 16A gR**	38701	3.18	501	0.01	20
20	**PF10 20A gR**	38702	3.82	565	0.01	20

Parameters

Type		PF10
Rated voltage	U_n	900 V d.c.
Test voltage	U_{test}	1000 V d.c.
Time constant (L/R)	τ	3 ms
Rated breaking capacity (RMS)	I_1	30 kA
Standards		IEC 60269-1, -2, -4; EN 60269-1, -4; EN 60269
Approval marks		

Dimensions

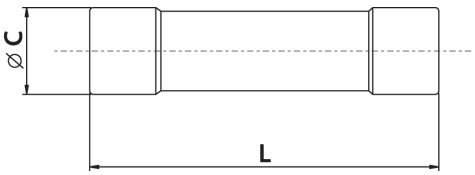

Type	Ø C [mm]	L [mm]
PF10	10.3	38

Characteristic

Prearcing time/current characteristic **PF10 gR**

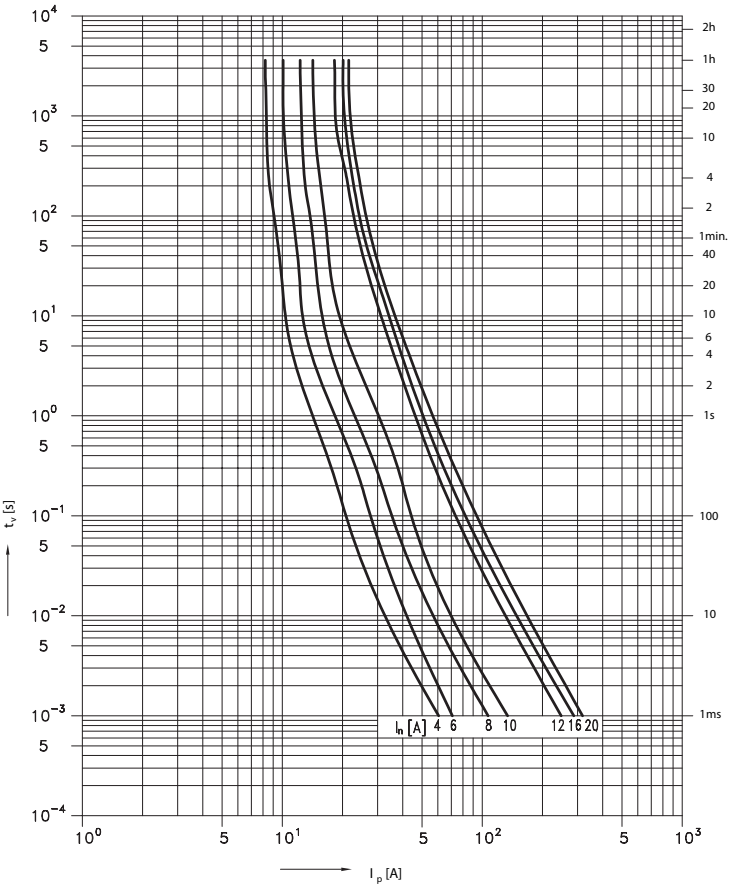

FUSE-LINKS UP TO 1000 V d.c. (CYLINDRICAL)

Cylindrical fuse-link PT22 is suitable for protection of circuits up to 1000 V d.c. (e.g. for the circuits of photovoltaic systems, trolley-buses and trams, or for protection of circuits up to 1500 V a.c.)

- Use in fuse disconnector OPT 22.
- The fuse-links do not contain harmful substances according to the RoHS Regulation (cadmium, lead and other).
- Utilization category gR/gS for protection of semiconductor devices and cables against overload and short-circuit.
- Utilization category gR for protection of semiconductor devices against overload and short-circuit.
- Utilization category aR for protection of semiconductor devices only against short-circuit. (PT22 50A aR up to 1.4x I_n can not be used in fuse disconnector OPT22)

Fuse-links PT22

I_n [A]	Type	Product code	Power losses [W]	Colour marking	Temperature rise [K]	I^2t total [A^2s]	Weight [kg]	Package [pcs]
1	**PT22 1A gR/gS**	08601	2.0	-	9	2.1	0.093	5
2	**PT22 2A gR/gS**	08598	2.54	Pink	14	4.1	0.093	5
4	**PT22 4A gR/gS**	08342	5.3	Brown	21	44	0.093	5
6	**PT22 6A gR/gS**	08341	6.37	Green	26	110	0.093	5
10	**PT22 10A gR/gS**	08340	3.05	Red	17	450	0.093	5
16	**PT22 16A gR/gS**	08339	4.66	Grey	21	1500	0.093	5
20	**PT22 20A gR/gS**	08338	5.36	Blue	25	3400	0.093	5
25	**PT22 25A gR/gS**	08668	6.93	Yellow	33	3900	0.093	5
32	**PT22 32A gR/gS**	08663	6.69	Violet	31	12500	0.093	5
40	**PT22 40A gR**	08337	9.4	Black	38	18500	0.093	5
50	**PT22 50A aR**	08343	11.6	-	46	27500	0.093	5

Parameters

Rated voltage	U_n		1000 V d.c. 1500 V a.c.
Rated breaking capacity/voltage	I_1	1000 V d.c.	50 kA
		1500 V a.c.	30 kA
Time constant (L/R)	τ		10 ÷ 15 ms
Approval marks			

Characteristic

Prearcing time/current characteristic **PT 22**

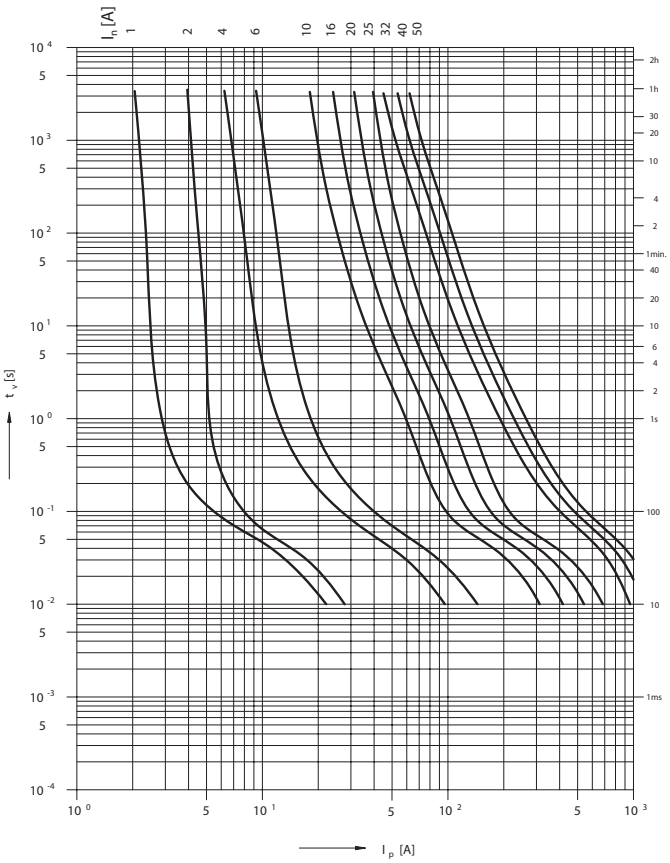

FUSE DISCONNECTORS FOR CYLINDRICAL FUSE-LINKS SIZE 10x38, DC DESIGN

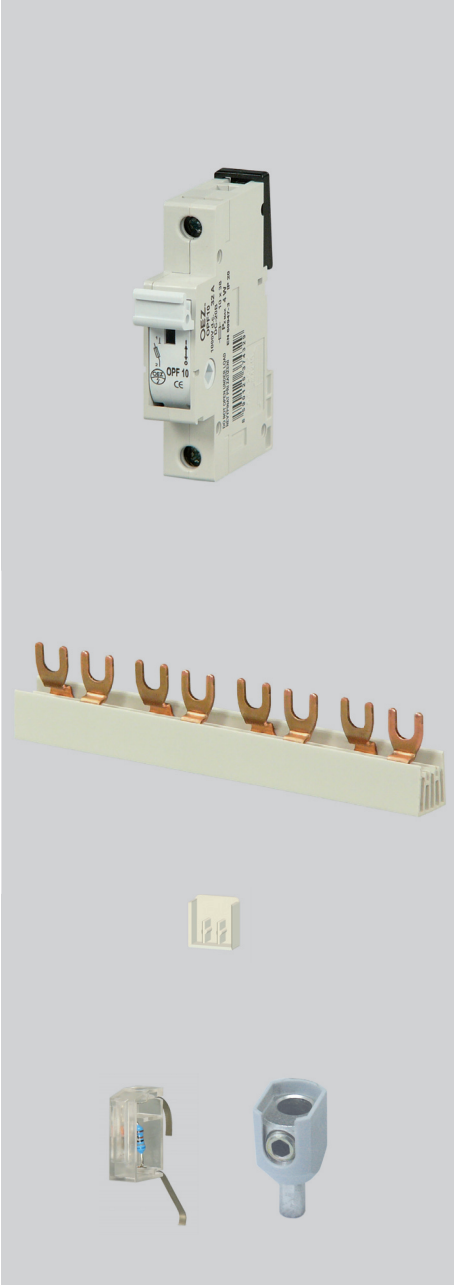

- Fuse switch-disconnectors OPF10 are intended for cylindrical fuse-links PV10 size 10x38.
- Fuse disconnectors OPF can be sealed in the closed state.
- These are modular devices for 45 mm cutout in the switchboard.

Fuse disconnectors

Type	Product code	I_n [A]	Number of poles	Weight [kg]	Package [pcs]
OPF10-1	37432	32	1	0.092	12
OPF10-2	38869	32	2	0.186	6

Accessories

Description	Type	Product code	Weight [kg]	Package [pcs]
Light indication, operating voltage 220 ÷ 1000 V d.c. / 230 ÷ 1000 V a.c.	**S-OPV10-1000**	39246	0.002	1
2-pole interconnecting busbar, cross-section 16 mm², max. current 80 A rated operating voltage 415 V, max. operating voltage 1000 V d.c., length 1 m	**G2L-1000-16-DC**	39080	0.467	20
End cap, for 2-pole and 3-pole rails with diameter 16 mm²	**EKC-2+3**	37384	0.001	10
Terminal extension, connection of Cu conductor of cross-section 2.5 ÷ 50 mm² and Al conductor of cross-section 16 ÷ 50 mm²	**AS-50-S-AL**	37391	0,02	15

Parameters

Rated operating current	I_e		32 A
Rated operating voltage	U_e		1000 V d.c.
Utilization category		1000 V d.c.	DC-20B
Rated insulation voltage	U_i		1000 V d.c.
Rated pulse withstand voltage	U_{imp}		4 kV
Fuse-link size	diameter x length		10x38
Max. rated current of the fuse-link	I_n		32 A
Max. power losses of the fuse-link	P_v		4 W
Mechanical endurance			1700
Degree of protection, cover closed			IP20
Degree of protection, cover opened			IP20
Connection cross-section			Cu/0.5 ÷ 25 mm² (2x 16 mm²)
Torque			2 Nm
Operating ambient temperature	t		-25 ÷ +55 °C
Max. sea level			2000 m
Seismic resistance according to VE ŠKODA			3 g/8 ÷ 50 Hz
Standards			IEC 60947-1, -3; EN 60947-1, -3
Approval marks			

Dimensions

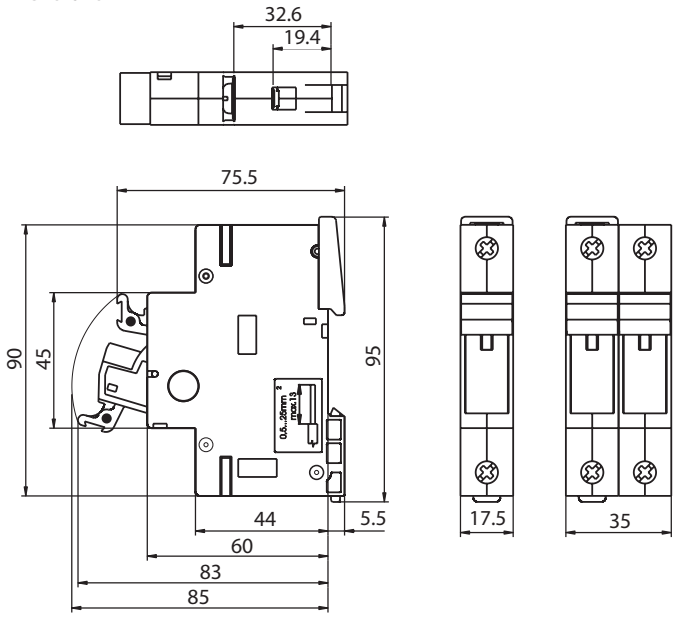

Diagram

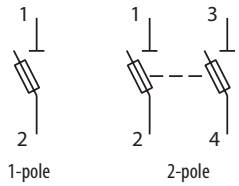

G2L-1000-16_DC

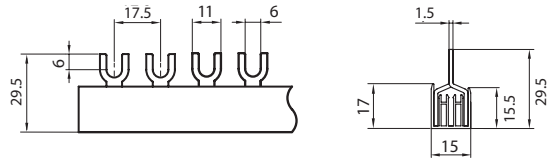

FUSE DISCONNECTORS FOR CYLINDRICAL FUSE-LINKS SIZE 22x127

- Fuse disconnectors OPT are intended for cylindrical fuse-links size 22x127, which are suitable for protection of circuits up to 1000 V d.c. and 1500 V a.c., e.g. for the circuits of photovoltaic systems, trolleybuses and trams.
- Hole in the cover for check of fuse amperage.
- Fixed to the panel by screws M6.
- Delivered with P-terminal, it can be removed, and the fuse disconnector can be connected by cable lugs for screws M8.

Fuse disconnectors

Type	Product code	Number of poles	For fuse-link size	Weight [kg]	Package [pcs]
OPT22/1	08474	1	22x127	0.48	4
OPT22/2	08344	2	22x127	0.96	2
OPT22/3	08700	3	22x127	1.44	1
OPT22/4	08345	4	22x127	1.92	1
OPT22/5	08701	5	22x127	2.4	1

Parameters

Rated operating current	I_e	63 A
Rated operating voltage	U_e	1500 V a.c., 1000 V d.c.
Utilization category		AC-20B, DC-20B
Fuse-links size		22 x 127
Max. power losses of the fuse-links	P_v	15 W
Degree of protection		IP 20
Standards		EN 60947-1, -3 IEC 60947-1, -3
Connection (1 ÷50 mm² Cu both solid and stranded) (2.5 ÷ 50 mm² Al solid)		P-terminal
Approval marks		

Dimensions

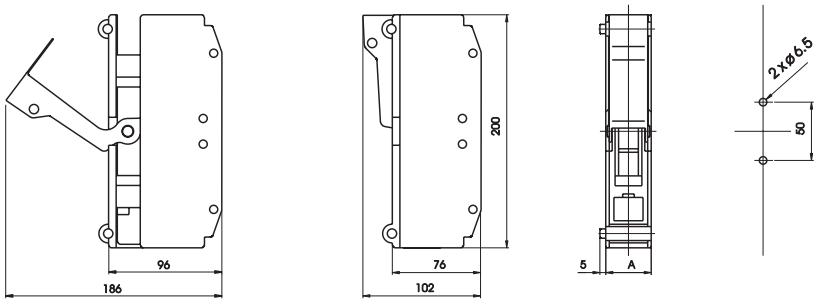

Type	A [mm] 1-pole	2-pole	3-pole	4-pole	5-pole
OPT22	40	80	120	160	200

Diagram

1-pole

SWITCH-DISCONNECTOR 5TE2 UP TO 63 A, 1000 V d.c.

- Disconnector, in particular for photovoltaic applications with high rated operating voltage up to 1000 V d.c.
- New system of terminals.
- Easy connection and check of conductors.
- Possibility of connection up to 4 conductors in the terminal.
- Possibility of connection conductors of various cross-sections.
- Easy installation by means of the new clip system on or from DIN rail.

Switch-disconnector 5TE2 515-1

Rated operating current	Type	Product code	Number of modules	Weight [kg]	Package [pcs]
63 A	**5TE2 515-1**	39153	4	0.672	1

Auxiliary switch PS-LV-1100

- Accessory to 5TE2 515-1.
- Mounting: on the right side of the switch-disconnector.
- For signalling the contact position of the switch-disconnector.
- Rated operating voltage / current: AC-14 230 V / 6 A, DC-13 220 V / 1 A.
- Connection of conductors: 0.75 ÷ 2.5 mm^2.

Arrangement of contacts	Type	Product code	Number of modules	Weight [kg]	Package [pcs]
11 [1)]	**PS-LV-1100**	38259	0.5	0.05	1

[1)] Each digit indicates successively the number of make and break contacts

Parameters

Type		5TE2 515-1
Standards		EN 60947-3, IEC/EN 60669-1
Approval marks		CE
Number of poles		4
Rated operating current	I_e	63 A
Rated operating voltage in serial connection of 4 poles	U_e	1000 V d.c.
Min. voltage / current		24 V / 300 mA
Rated short-time withstand current DC-1000 V 4-pole	I_{cw}	760 A
Rated short-circuit making capacity DC-1000 V 4-pole	I_{cm}	500 A
Mechanical endurance		10 000 operating cycles
Electrical endurance		5 000 operating cycles
Rated power losses per pole		4.4 W
Rated pulse withstand voltage (1.2/50 µs)	U_{imp}	> 5 kV
Utilization category		DC-21B
Mounting on „U“ rail according to EN 60715 – type		TH 35
Degree of protection		IP20
Connection		
Conductor Cu - rigid (solid, stranded)		0.75 ÷ 35 mm^2
Conductor Cu - flexible (with a sleeve)		0.75 ÷ 25 mm^2
Torque		2.5 ÷ 3 Nm
Top or bottom connection		yes [1)]
Operating conditions		
Ambient temperature		-25 ÷ + 45 °C
Working position		arbitrary

[1)] It is necessary to observe the polarity marked on the device

SWITCH-DISCONNECTOR 5TE2 UP TO 63 A, 1000 V d.c.

Diagram

5SE2 515-1

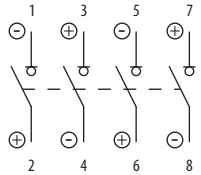

PS-LV-1100

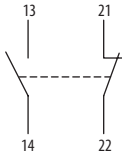

Dimensions

5TE2 515-1

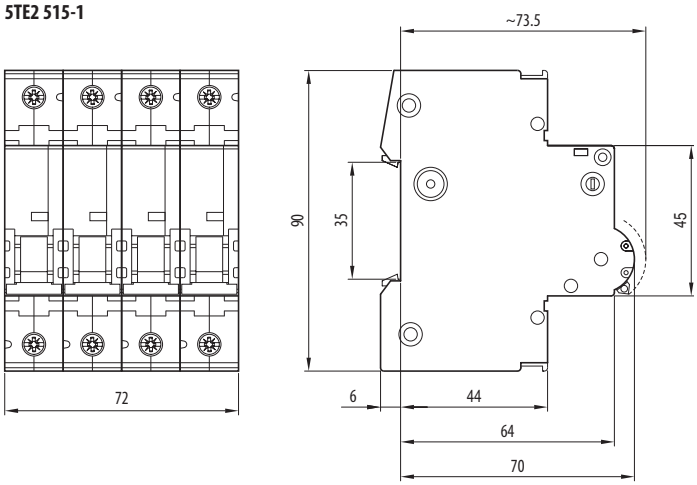

PS-LV-1100

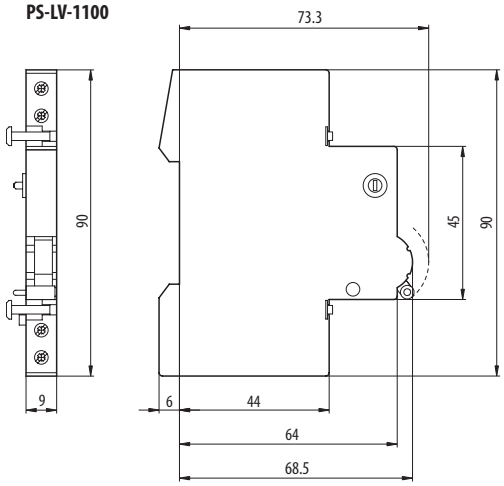

Connection

Both grounded and ungrounded systems 1000 V d.c.

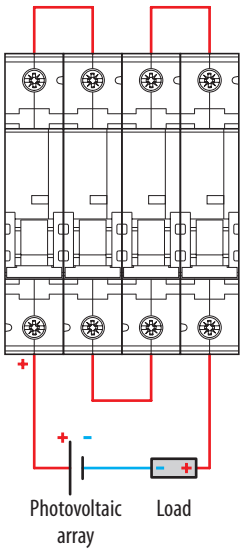

Only ungrounded system 1000 V d.c.

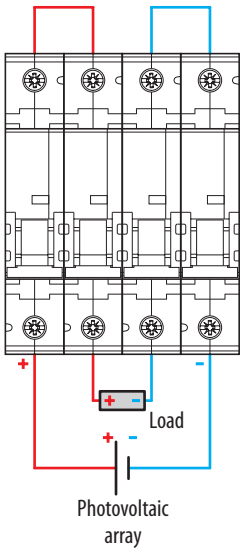

SWITCH-DISCONNECTOR 5TE2 UP TO 63 A, 1000 V d.c.

Connection of conductors and interconnecting busbars

Terminal system

Design: two levels of terminals with a fixed barrier between them.
Connection: each level enables connection of both the conductor and interconnecting busbar (interconnecting busbars with pins, type „S" see catalogue Modular devices MINIA). This is possible from both sides of the device. For connection range see the table below.
Safety: the terminals are equipped with sliding plastic caps, which effectively increase protection against dangerous contact with live parts.

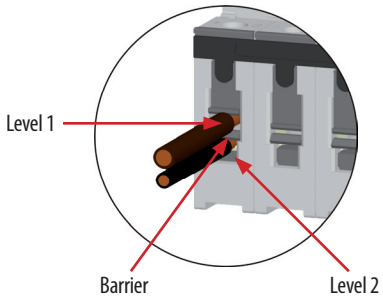

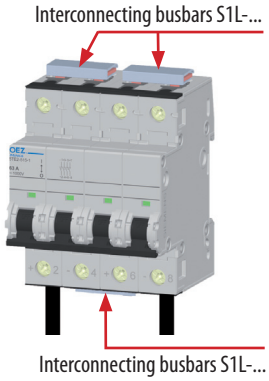

Advantages

Possibility of connection:

- conductors of various cross-sections
- up to 4 conductors in the terminal
- conductor of cross-sections up to 35 mm²

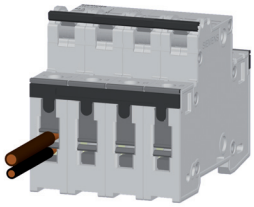

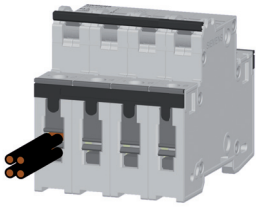

Mounting/demounting on/from „DIN" rails

New system of latches enables:

- very quick mounting and demounting by hand, without any tool needed.
- withdrawal/replacement of the residual current circuit breaker from a row of devices interconnected by the interconnecting busbar up or down without interruption of adjacent circuit or removal of the busbar.

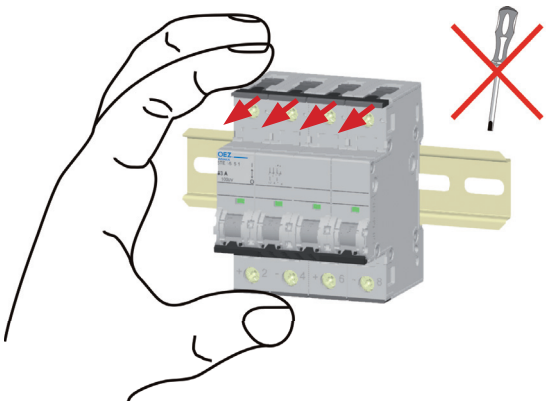

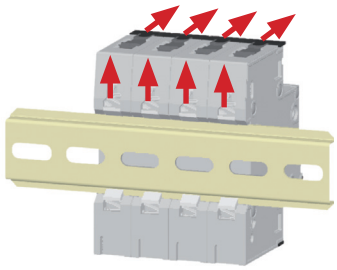

Connection range

Number of connected conductors	Conductor - rigid (solid, stranded)		Conductor flexible with end sleeve	
	Level 1	Level 2	Level 1	Level 2
1× conductor	1× (≤ 35 mm²)		1× (≤ 25 mm²)	
		1× (≤ 25 mm²)		1× (≤ 16 mm²)
2× conductor	2× (≤ 10 mm²)		2× (≤ 6 mm²)	
		2× (≤ 6 mm²)		2× (≤ 4 mm²)
	1× (≤ 35 mm²)	1× (≤ 10 mm²)	1× (≤ 25 mm²)	1× (≤ 6 mm²)
	1× (≤ 25 mm²)	1× (≤ 16 mm²)		
	1× (≤ 16 mm²)	1× (≤ 25 mm²)	1× (≤ 16 mm²)	1× (≤ 16 mm²)
3× conductor	1× (≤ 35 mm²)	2× (≤ 6 mm²)	1× (≤ 25 mm²)	2× (≤ 2.5 mm²)
			1× (≤ 16 mm²)	2× (≤ 4 mm²)
	2× (≤ 10 mm²)	1× (≤ 25 mm²)	2× (≤ 6 mm²)	1× (≤ 16 mm²)
4× conductor	2× (≤ 10 mm²)	2× (≤ 6 mm²)	2× (≤ 6 mm²)	2× (≤ 4 mm²)

SURGE VOLTAGE ARRESTERS SVF UP TO 1000 V d.c.

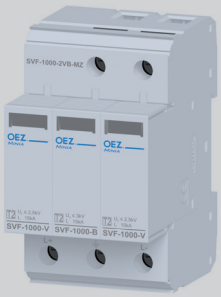

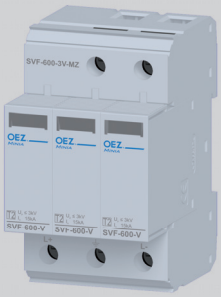

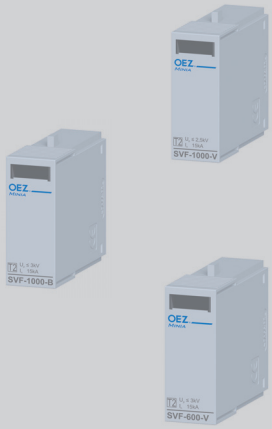

- For protection of electric networks and equipment against overvoltage from direct or indirect lightning strokes in the arresting equipment of buildings, lines etc.
- For protection of electric networks and equipment of residential, commercial and industrial buildings etc.
- It reduces voltage and „cut up" the overvoltage wave power caused by direct or indirect lightning stroke.
- It reduces the energy of overvoltage wave caused by switching processes in the network.
- Use: as the second stage (medium protection) against overvoltage type 2 according to EN 61643-11.
- Use in d.c. applications, in particular on d.c. side of the photovoltaic system.

Surge voltage arresters SVF-...

- Use for arresting impulse current up to 30 kA (8/20 µs), e.g. induced current or impulse currents arising in lightning stroke.
- Main components are voltage dependent non-linear resistance varistor, resistance of which decreases with rising voltage and lightning arrester reducing the leakage current.
- Design: multipart, consisting of a base and replaceable modules. The modules can be removed in case of measurement or failure without necessity of device disconnection.
- Visual signalling of the shut-down device state (after disconnection the lightning current arrester is non-functional and the replaceable module must be replaced).

U_{ocmax}	Design	Type	Product code	Number of modules	Weight [kg]	Package [pcs]
1000 V d.c.	without remote signalling	**SVF-1000-2VB-MZ**	39165	3	0.344	1
1000 V d.c.	with remote signalling	**SVF-1000-2VB-MZS**	39527	3	0.347	1
600 V d.c.	without remote signalling	**SVF-600-3V-MZ**	39528	3	0.322	1

Replaceable modules for surge voltage arresters SVF-..

Design	Type	Product code	Number of modules	Weight [kg]	Package [pcs]
Varistor	**SVF-1000-V-M**	39166	1	0.0826	1
Arrester	**SVF-1000-B-M**	39167	1	0.0454	1
Varistor	**SVF-600-V-M**	39530	1	0.0717	1

SURGE VOLTAGE ARRESTERS SVF UP TO 1000 V d.c.

Parameters

Type				SVF-1000-2VB-MZ SVF-1000-2VB-MZS	SVF-600-3V-MZ
Standards				EN 61643-11 IEC 61643-1 IEC 60364-7-712	EN 61643-11 IEC 61643-1 IEC 60364-7-712
Approval marks				CE	CE
Max. off-load voltage	$U_{oc\,max}$			1000 V d.c.	600 V d.c.
Max. short circuit current	$I_{sc\,max}$			80 A	-
Maximum constant operating voltage	U_c			1000 V d.c.	600 V d.c.
Rated discharge current (8/20 µs)	I_n			15 kA	15 kA
Maximum discharge current (8/20 µs)	I_{max}			30 kA	40 kA
Voltage protection level	U_p	I_n 15 kA	L+, L- (L+/L-), PE	≤ 5 kV ≤ 3 kV	≤ 3 kV ≤ 3 kV
		I_n 10 kA	L+, L- (L+/L-), PE	≤ 4.5 kV ≤ 2.5 kV	- -
		I_n 5 kA	L+, L- (L+/L-), PE	≤ 4 kV ≤ 2 kV	≤ 2.5 kV ≤ 2.5 kV
Leakage current at U_c	I_{PE}			≤ 20 µA	≤ 20 µA
Sleep input power	P_c			≤ 20 mW	≤ 20 mW
Response time				≤ 25 ns	≤ 25 ns
Arrester classification according to			EN 61643-11 IEC 61643-1 VDE 0675-6	type 2 class II class C	type 2 class II class C
Degree of protection				IP20	IP20
Mounting on „U“ rail according to EN 60715 – type				TH 35	TH 35
Connection					
Conductor - rigid (solid, stranded)				1.5 ÷ 35 mm²	1.5 ÷ 35 mm²
Conductor - flexible				1.5 ÷ 25 mm²	1.5 ÷ 25 mm²
Torque				4.5 Nm	4.5 Nm
Top or bottom connection				-	-
Optical signalling					
Functional state				Colour transparent	Colour transparent
Non-functional state				Red	Red
Remote signalling					
Arrangement of contacts [1]				001	-
Max. voltage / current	U_{max} / I_{max}			250 V a.c. / 1 A 125 V d.c. / 0.2 A	- -
Minimum switched power				0.12 VA (12 V, 10 mA)	-
Connection – conductor (rigid, flexible)				0.14 ÷ 1.5 mm²	-
Torque				0.25 Nm	-
Operating conditions					
Ambient temperature				-25 ÷ 45 °C	-25 ÷ 45 °C
Working position				arbitrary	arbitrary

[1] Each digit indicates successively the number of make, break and break-make contacts

Dimensions

SVF-...

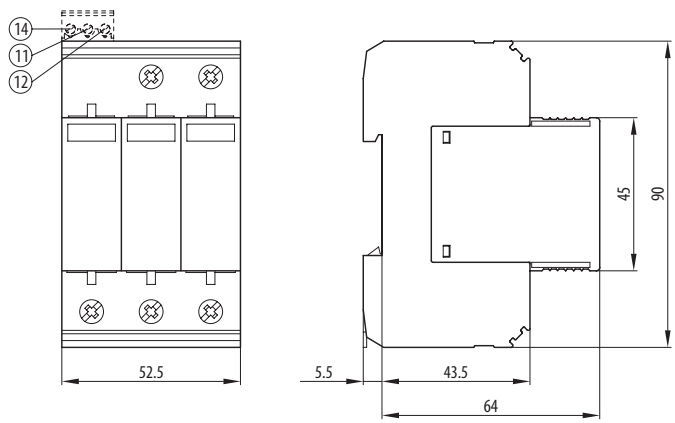

Diagram

SVF-1000-2VB-MZ

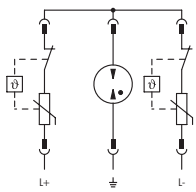

SVF-1000-2VB-MZS

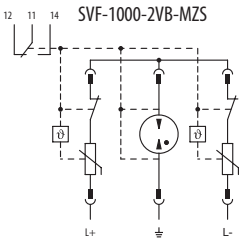

SVF-600-3V-MZ

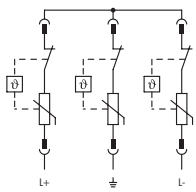

FREQUENTLY ASKED QUESTIONS IN THE PHOTOVOLTAIC FIELD

1) How to select rated voltage and rated current of fuse-links for d.c. protection of PV sources?

Parameters shall be selected with regard to resulting series-parallel connection of PV panels and their characteristics.

For rated voltage of the protective devices the following applies:

$U_n \geq 1.2 \times V_{OC\_STC} \times M$

M…number of panels in series
V_{OC_STC}…open circuit voltage of the PV panel

The factor 1.2 makes provision for voltage increase at low ambient temperatures, manufacturing tolerances of PV panels, etc.

For selection of rated current of the fuse-link the following applies:

$1.4 \times I_{SC} \leq I_n \leq 0.85\ I_{MOD\_REVERSE}$
for fuse-links with characteristic gR; gS; gG $I_n \geq 10$ A

$1.4 \times I_{SC} \leq I_n \leq 0.7\ I_{MOD\_REVERSE}$
for fuse-links with characteristic gR; gS; gG $I_n < 10$ A

The factor 1.4 makes provision for the use at ambient temperature of 60°C, radiation intensity of 1000 W/m^2, and influence of cyclic load. If the manufacturer of the panel prescribes a maximum protection value, this value shall be accepted.

Note: For collective protection of series-parallel connection of PV panels, the resulting current is proportional to the number of parallel branches.

2) Under what conditions is overcurrent protection necessary on d.c. side of PV applications?

Overcurrent protection need not be implemented for PV conductors of strings and PV arrays, if conductor rating capacity is equal to or higher than $1.25 \times I_{SC\ STC}$ in any places.
Overcurrent protection need not be implemented for main PV conductors, if conductor rating capacity is equal to or higher than $1.25 \times I_{SC\ STC}$ of PV source.

3) Is it possible to use series connection of fuse-links to achieve higher rated voltage of the fuse group?

In no case. For series combination of fuse-links it is not possible to guarantee uniform distribution of cut-off processes in case of failure. One fuse-link always takes over higher part of cut-off processes, and for this reason it cannot be overloaded above its design characteristic.

4) When and why to use overvoltage protection on d.c. side close to both the inverter and PV panels?

In case of application, where PV panels are at a distance from the inverter (more than 10 m), it is recommended to use the overvoltage protection both upstream the inverter and at the photovoltaic panels. Due to the fact that voltage in long lines can rise significantly thanks to induction in the line.

5) Why are surge voltage arresters with gap preferred in PV applications?

In low-voltage networks of 230/400 V varistor-based overvoltage protective devices are commonly used.
The varistor itself shows a leakage current at operating voltage. In common applications with one type of varistor-based overvoltage protection the leakage current is negligible.
This is not, however, true for the photovoltaic applications, where tens of surge voltage arresters are used. In this case the total leakage current is not negligible, because it decreases the resulting output.

6) What fuse-link type and characteristic to select for protection of d.c. side?

The decisive parameter is rated d.c. voltage of the fuse. For protection of PV applications it is required to use fuse-links with full tripping range, i.e. type „g“. Fuse-links with tripping range „a“ cannot be used, because their breaking capacity is limited in the range of small overloads.

7) What protection to use at current values higher than 20 A?

Fuse-links PF10 are used advantageously for rated currents up to 20A. For currents higher than 20 A it is possible to use fuse-links for protection of semiconductors (char. gR, gS), e.g. PT22, PV514, P51R06, P51U06 with regard to required values of operating d.c. voltage. These types of fuse-links with characteristic gR are up to rated current of 80 A.

8) Is it possible to use calculation program Sichr for design of main electrical system of a.c. part of a photovoltaic power plant delivering electrical energy to distribution network?

Yes, it is. In this case the photovoltaic power plant is considered a load. The source will be the connection point (transformer or general source). Consequently, we will enter the output of the photovoltaic power plant in kW in the outlet at the end of the line or on the line. Then we will select simultaneity and power factor (cos φ) equal to 1.
Reverse direction of current in the line has no effect on the line rating. This configuration is even necessary for the design of overcurrent protection of the line and ensuring protection by self-disconnection from the source of the a.c. side of the photovoltaic power plant. The advantage of program Sichr is its possibility of performing economic optimization of cross-section of the proposed lines and thus reduction of total acquisition and operating costs.

9) You recommend using disconnector 5TE2 515-1 (63 A, 1000 V d.c.) as a disconnector on d.c. side of PV sources. At the same time you note that for this purpose it is possible to use also circuit breakers of LPN-DC and LST-DC series.

The circuit breakers LPN-DC and LST-DC are able to fulfil also the function of d.c. circuit disconnector. That is why this possibility is mentioned.

NOTES

OEZ®

OEZ s.r.o.
Šedivská 339
561 51 Letohrad
Czech Republic
tel.: +420 465 672 379
fax: +420 465 672 398
e-mail: oeztrade.cz@oez.com
www.oez.com

OEZ s.r.o.
Trade Office Prague
Podnikatelská 547
190 11 Prague 9
Czech Republic
tel.: +420 257 181 710
fax: +420 235 315 026
e-mail: oeztrade.cz@oez.com
www.oez.com

FV1-2010-A

OEZ®

WWW.OEZ.COM